J 35 × 5 mm
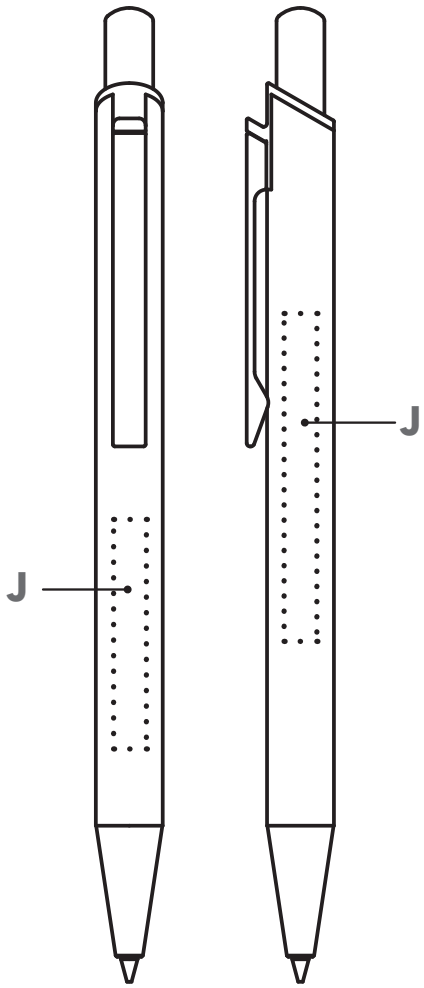
J 50 × 5 mm